Art. **CGI-350.5P**

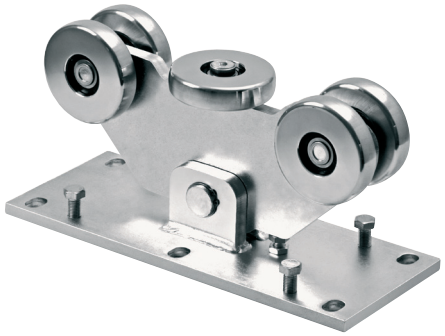

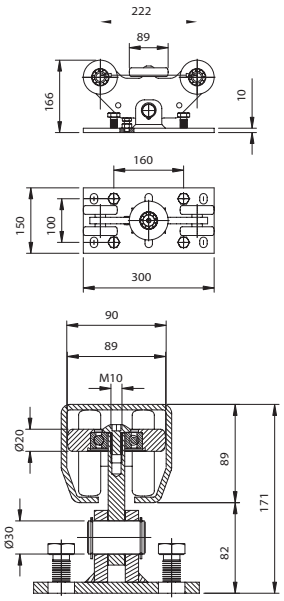

Art.		INOX		Kg
CGI-350P	little	10130305	1	10,70

EN

USE: Carriage for cantilever gates in stainless steel.
TYPE: Carriage with 5 wheels, monobloc body , stainless steel.
FIXING: Use 6 anchor bolts CG-348M16 or suitable plugs (both not supplied). For the dimensions of the concrete base, see the enclosed table. The base enables height adjustment by means of the 4 M16 screws and the special counter plate CGI-05P.
MATERIAL: stainless steel.
RECYCLING: Disposal as ferrous material in accordance with the current laws in the country of installation.
PARTS SUBJECT TO WEAR: Bearings and wheels.
IMPORTANT: The manufacturer reserves the right to modify the characteristics of the product as required without notice. The manufacturer declines any liability for even partial to the product, and the declared performance values are valid only if the installation procedures are carried out by personnel.

TECHNICAL CHARACTERISTICS				
			CGI-350.5P	
WEIGHT OF PART			10,95 Kg	
LOAD-BEARING CAPACITY (Max. weight on axis)			2000 Kgf	
MAINTENANCE FREQUENCY				
PRIVATE HOME	BUSINESS	WAREHOUSE	CONDOMINIUM > 20 UNITS <20 UNITS	CONDOMINIUM
2 YEAR*	2 YEAR *	1 YEAR *	6 MONTHS*	6 MONTHS *
Check the functionality and integrity of carriages.				
Clean lower area of contact between wheels and rail				
Make sure the carriages are integral with the concrete base				
*The scheme refers to a normal workplace (not marine or particularly aggressive environments).				

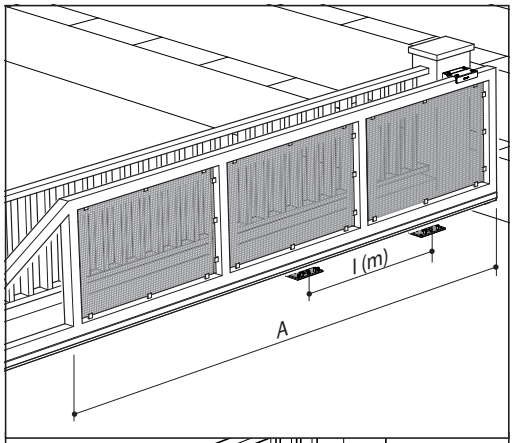

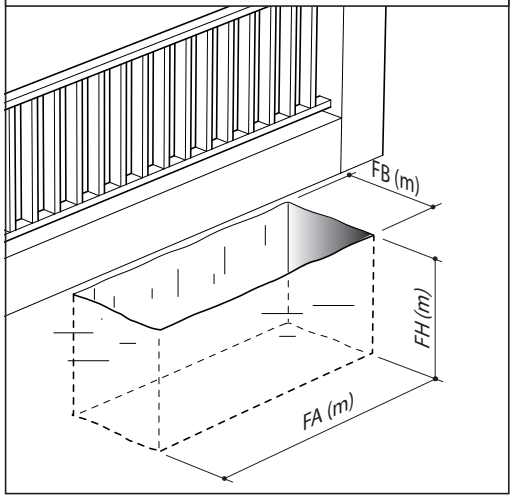

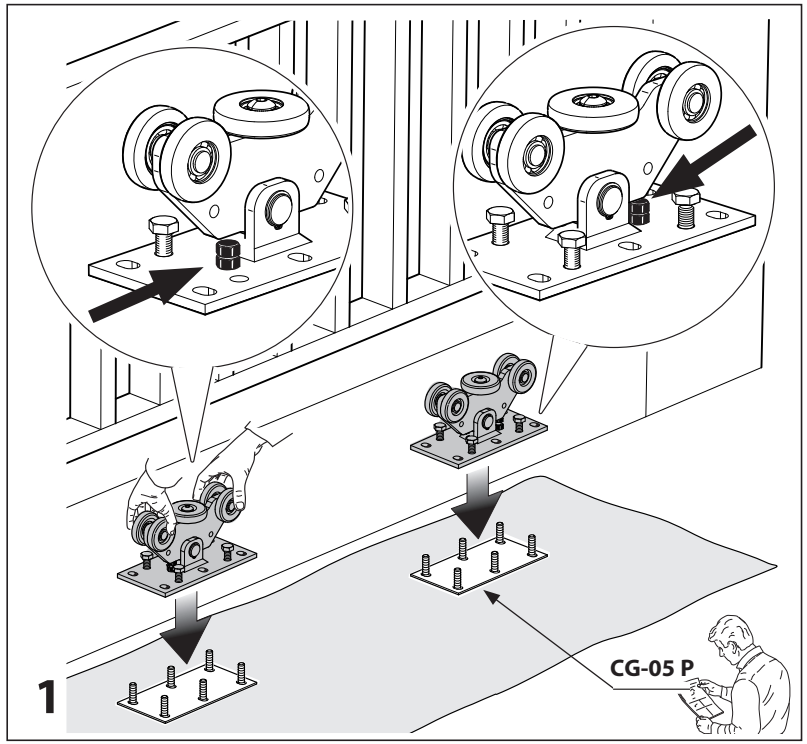

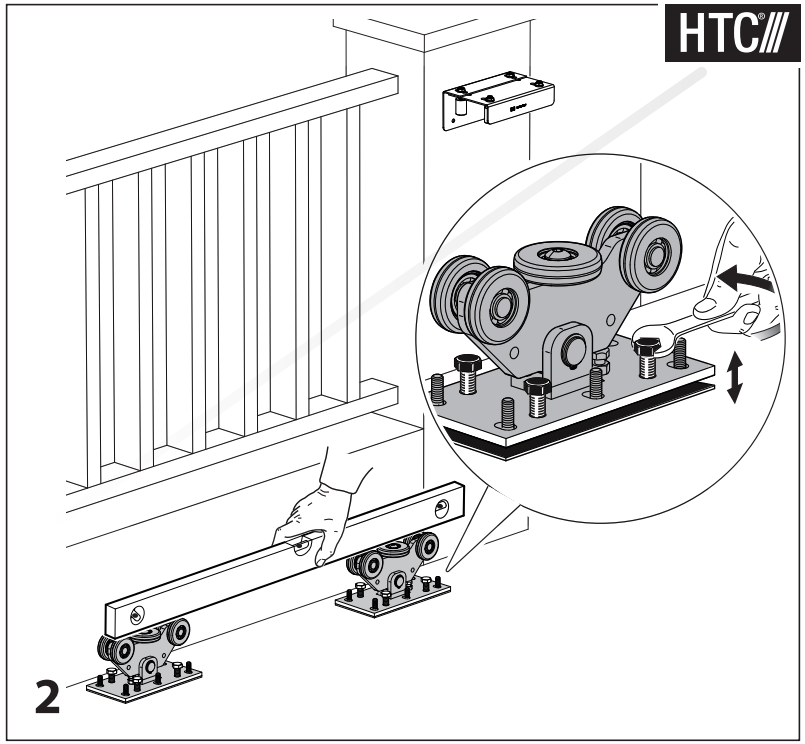

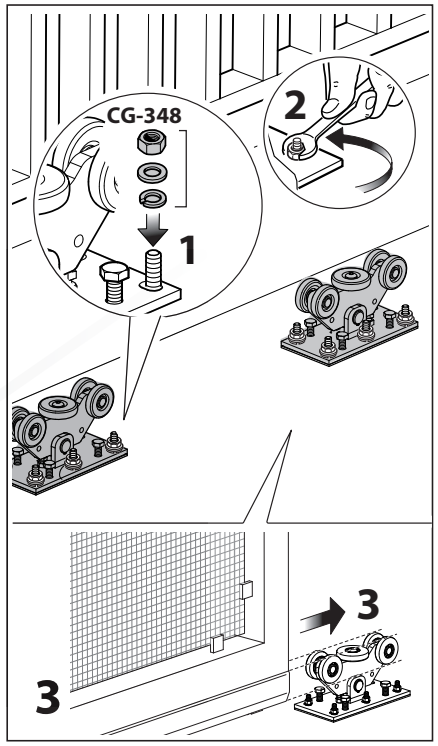

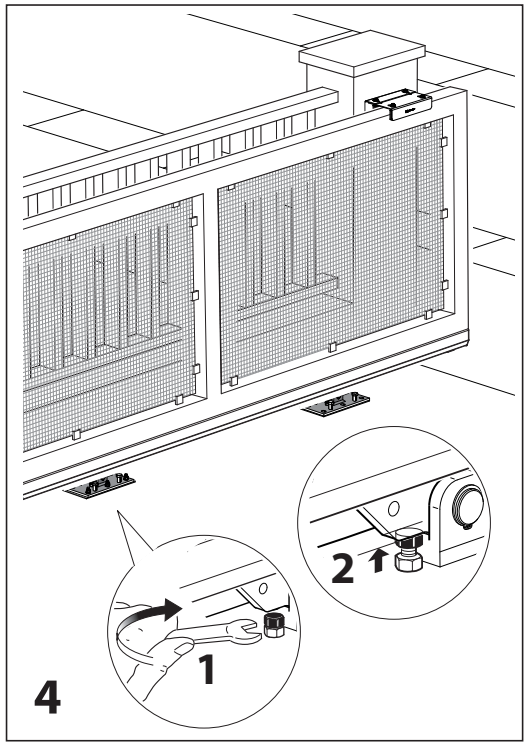

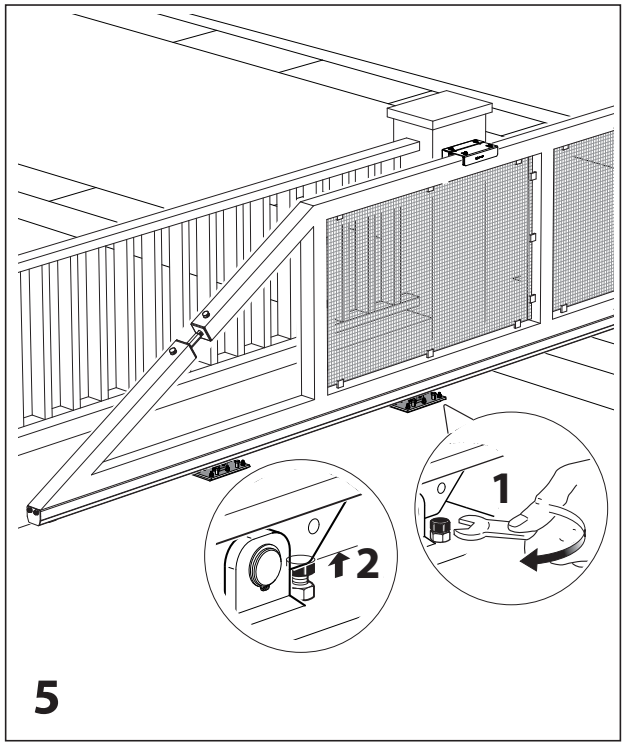

CGI-350.5P (F1max=2000 Kg C=0,30m) WITH CGI-345												
WEIGHT (Kg)	A=4m			A=5m			A=6m			A=7m		
	l (m)			l (m)			l (m)			l (m)		
	FA (m)	FH (m)	FB (m)	FA (m)	FH (m)	FB (m)	FA (m)	FH (m)	FB (m)	FA (m)	FH (m)	FB (m)
400	0,70			0,90			1,10			1,30		
	1,40	1,00	0,60	1,60	1,00	0,60	1,80	1,00	0,60	2,00	0,90	0,60
450	0,80			1,00			1,20			1,50		
	1,50	0,90	0,60	1,70	0,90	0,60	1,90	0,90	0,60	2,20	0,90	0,60
500	0,90			1,20			1,40			1,60		
	1,60	0,90	0,60	1,90	0,90	0,60	2,10	0,90	0,60	2,30	0,80	0,60
550	1,10			1,30			1,60			1,90		
	1,80	0,90	0,60	2,00	0,80	0,60	2,30	0,80	0,60	2,60	0,70	0,60
600	1,20			1,50			1,80			2,10		
	1,90	0,80	0,60	2,20	0,80	0,60	2,50	0,70	0,60	2,80	0,70	0,60
650	1,30			1,60			2,00			2,30		
	2,00	0,80	0,60	2,30	0,70	0,60	2,70	0,70	0,60	3,00	0,60	0,60
700	1,50			1,80			2,20			2,60		
	2,20	0,70	0,60	2,50	0,70	0,60	2,90	0,60	0,60	3,30	0,60	0,60
750	1,60			2,00			2,40			2,80		
	2,30	0,70	0,60	2,70	0,60	0,60	3,10	0,60	0,60	3,50	0,60	0,60
800	1,80			2,20			2,70			3,20		
	2,50	0,60	0,60	2,90	0,60	0,60	3,40	0,60	0,60	3,90	0,60	0,60